VVT SENSOR

COMPONENTS

SF0PV–02

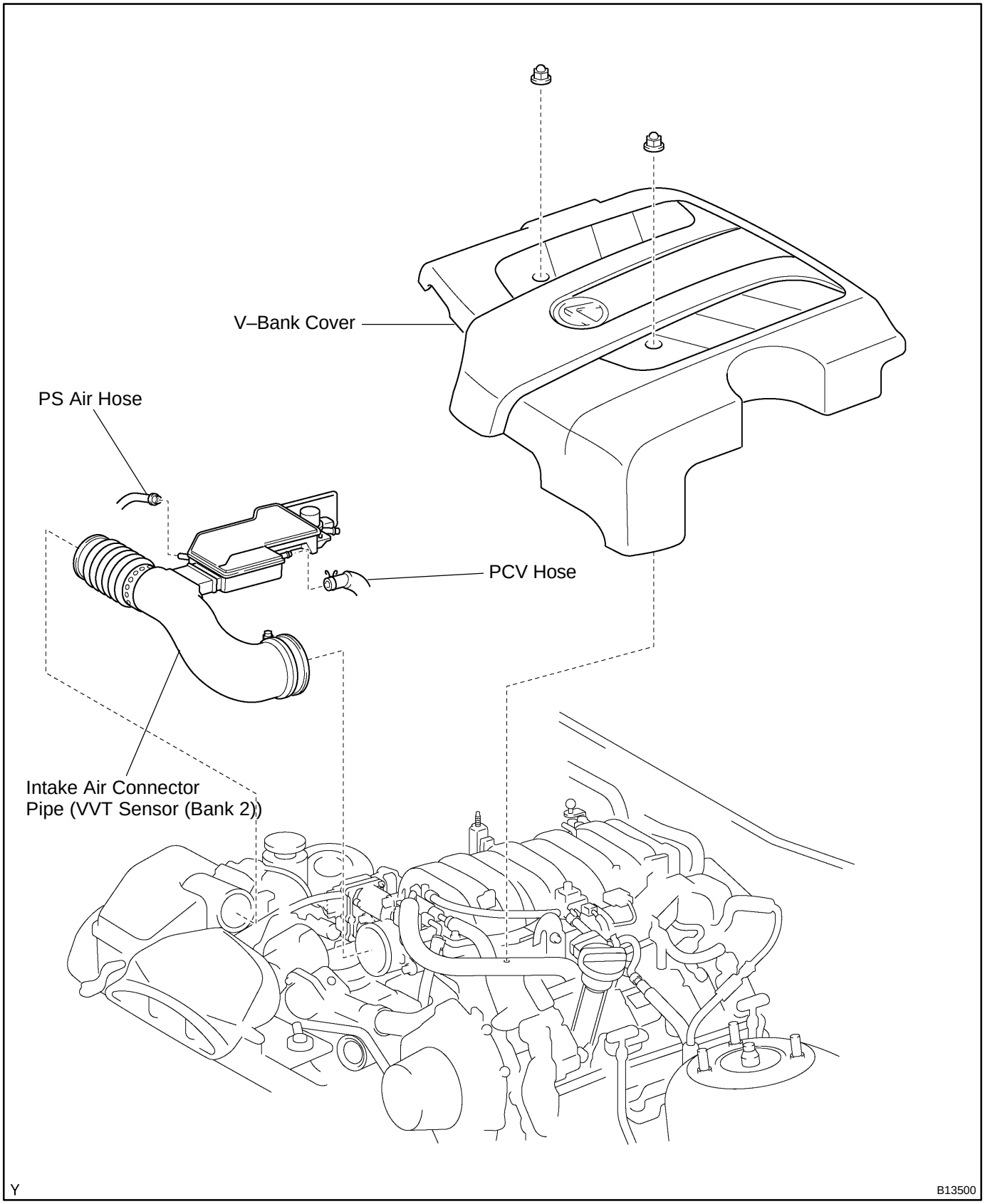

VVT Sensor (Bank 1)

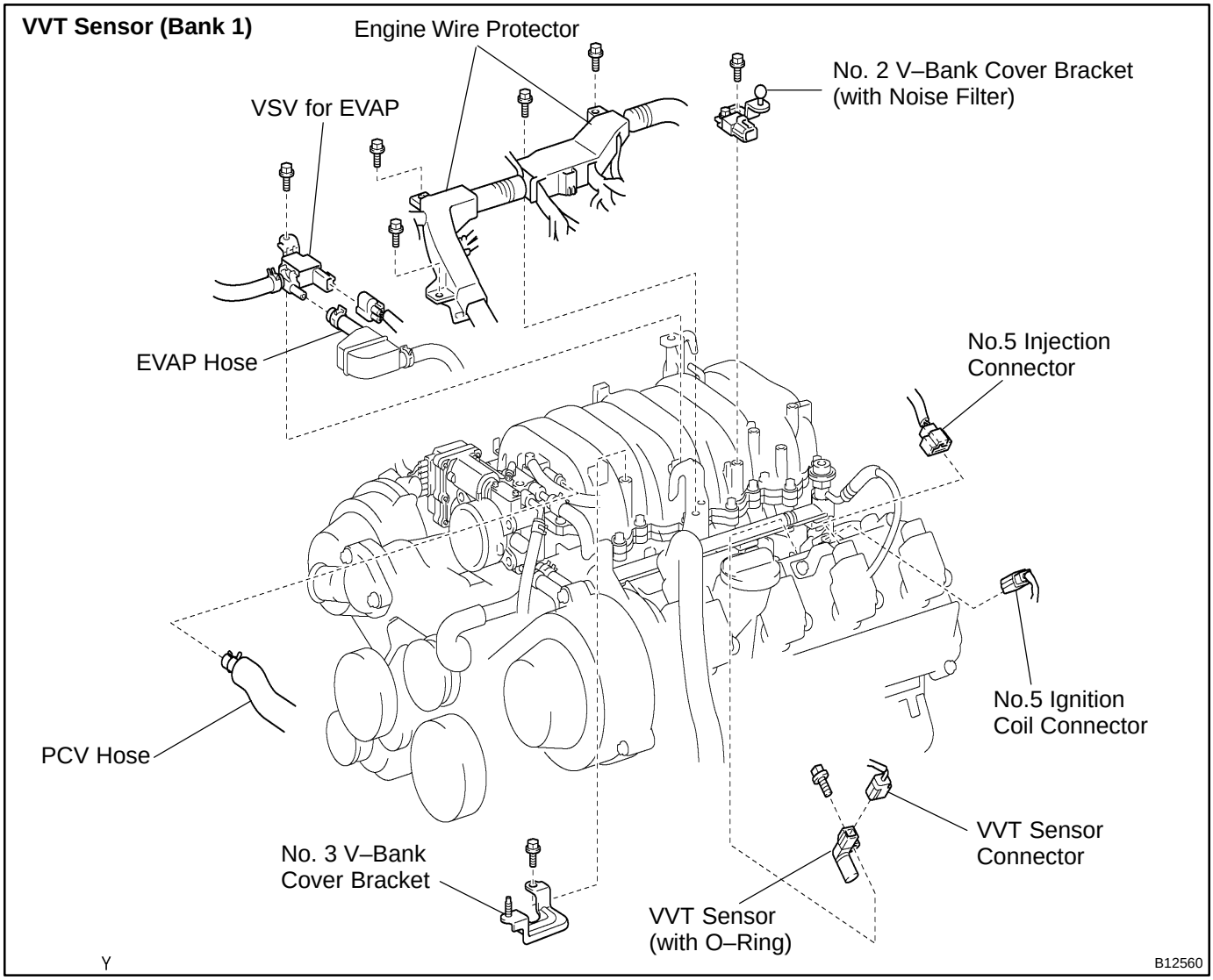
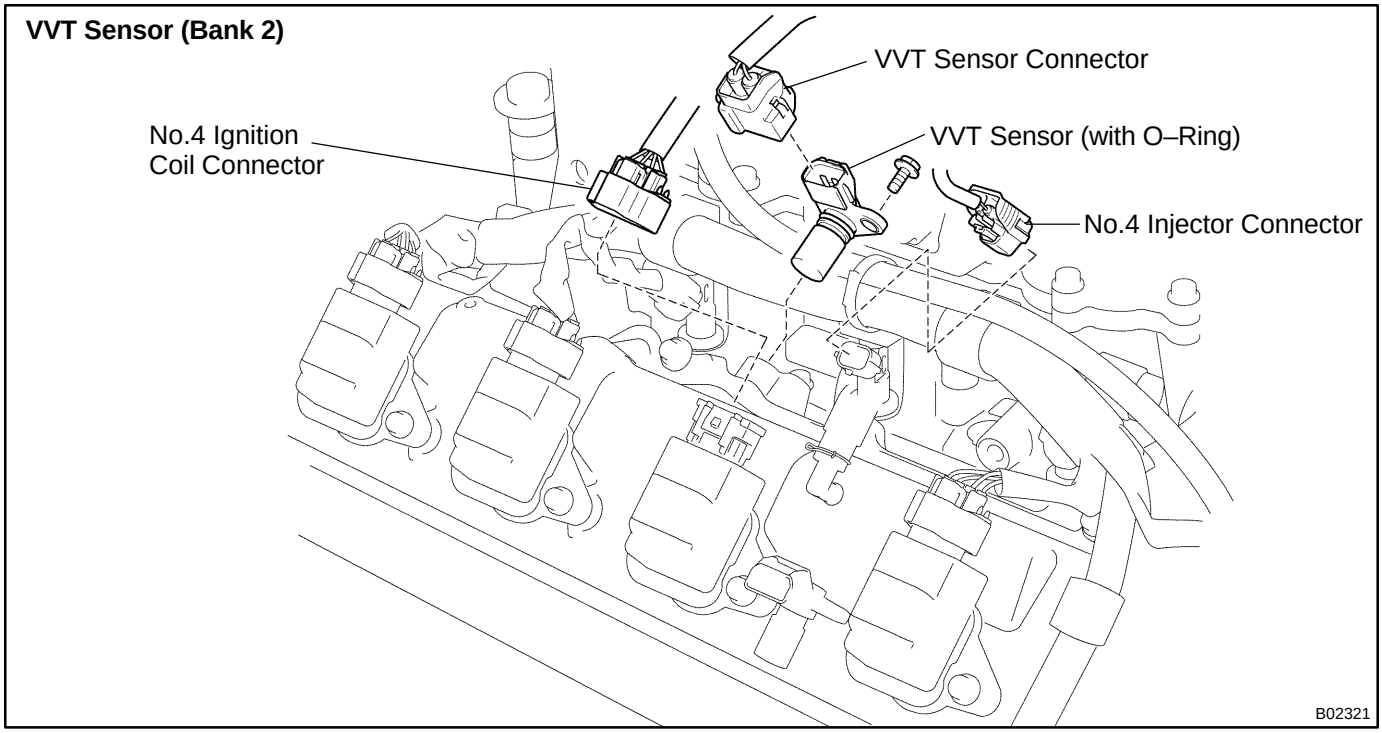
VVT Sensor (Bank 2)